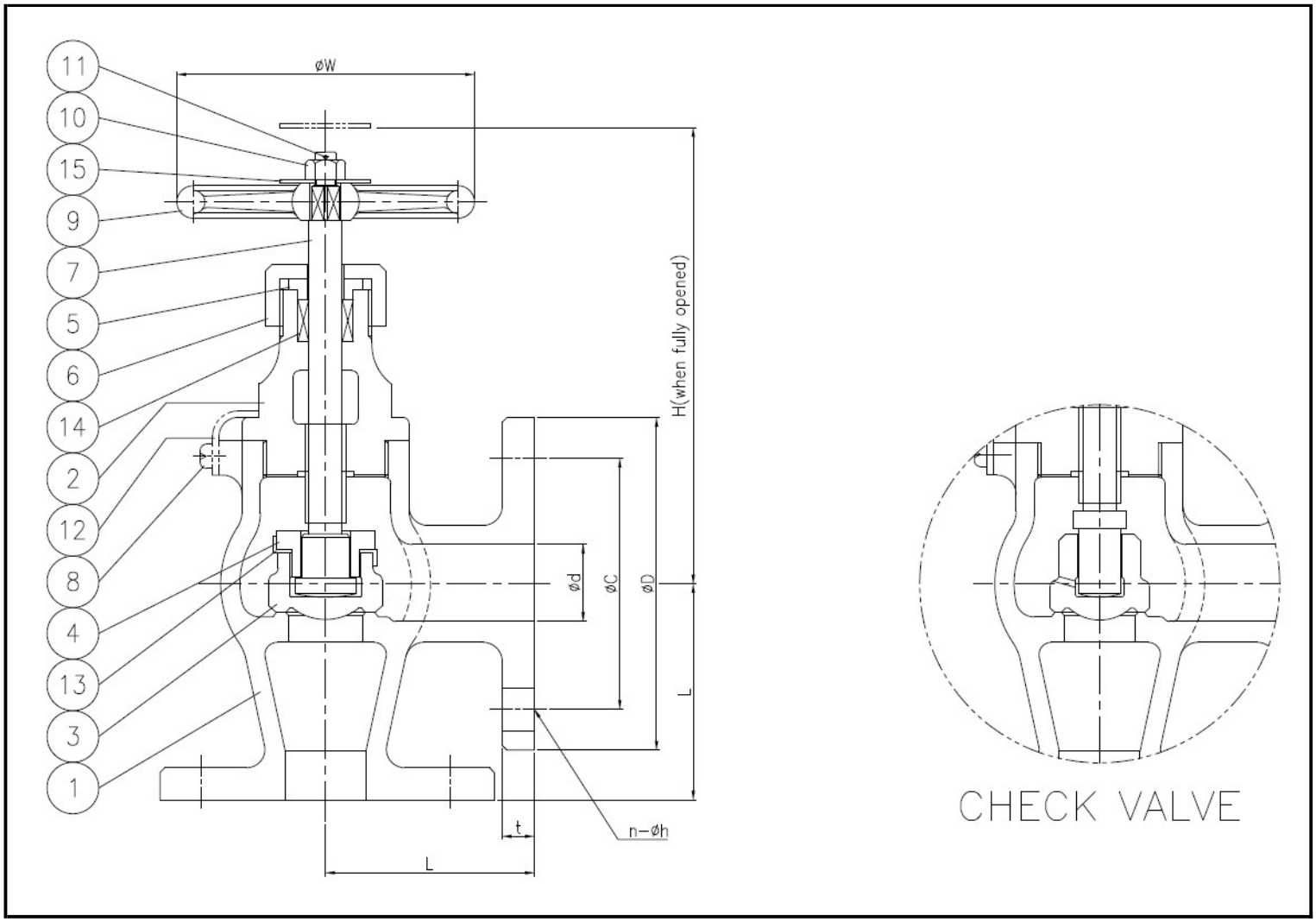

■ Material List

NO.	Parts	Material
1	Body	SCS13, 14, 16
2	Bonnet	SCS13, 14, 16
3	Disc	SCS13, 14, 16
4	Disc nut	SUS304, 316, 316L
5	Packing gland	SUS304, 316, 316L
6	Packing gland nut	SUS304, 316, 316L
7	Stem	SUS304, 316, 316L
8	Set screw	SUS304
9	Handwheel	FC200
10	Hex. Nut	SUS304
11	Split pin	C2600
12	Lock plate	SUS304
13	Disc lock washer	SUS304
14	Packing	GRAPHITE
15	Name plate	C2801 or SUS304